C.I.P.	9 mm Makarov Country of Origin: SU	TAB.	IV
		Date	91-09-20
		Revision	00-06-07

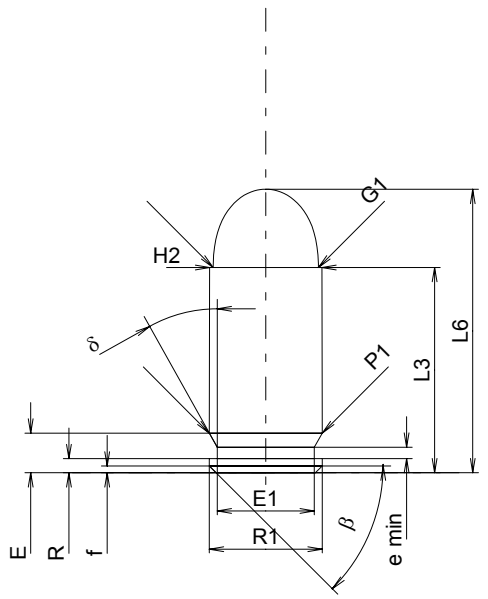

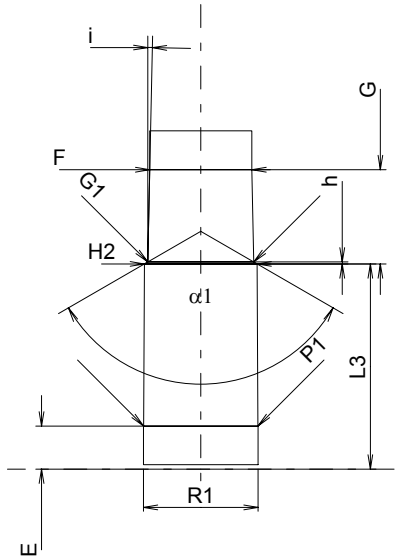

Scale 1.5:1

CARTRIDGE MAXI

Lengths

L1	=		
L2	=		
L3 1)	=	18.10	-0.25
L4	=		
L5	=		
L6	=	25.00	

Case Head

R	=	1.25
R1	=	9.95
R3	=	
E	=	3.50
E1	=	8.55
e min	=	1.00
δ	=	29°15'
f	=	0.60
β	=	45°

Powder Chamber

P1	=	9.95
P2	=	

Junction Cone

α	=	
S	=	
r1 min	=	
r2	=	

Collar

H1	=	
H2 1)	=	9.91

Projectile

G1 1)	=	9.27
G2	=	
F	=	
L3+G 1)	=	26.40

Pressures (Energies)
Method Transducer

Pmax	=	1600	bar
PK	=	1840	bar
PE	=	2080	bar
M	=	10.50	

Miscellaneous Dimensions

Fe 1)	=	0.30
delta L	=	

CHAMBER MINI

Lengths

L1	=	
L2	=	
L3 1)	=	18.10

Breech

R	=	
R1	=	10.10
R2	=	
R3	=	
r	=	

Powder Chamber

E	=	3.80
P1 1)	=	10.07
P2	=	

Junction Cone

α	=	
S	=	
r1 max	=	
r2	=	

Collar

H1	=	
H2 1)	=	9.93

Commencement of Rifling

G1 1)*	=	9.35
G 1)*	=	8.30
α1	=	120°
h *	=	0.17
s	=	
i 1)	=	1°13'59"
w	=	

Barrel

F 1)*	=	9.00
Z 1)	=	9.27

Grooves

b	=	4.50	
N	=	4	
u	=	240.00	
Q	=	66.16	mm²

Dimensions in << mm >>
Dimensions and Tolerances for Proof Barrels
see Appendix CR 1.

Notes: 1) Check for safety reasons
* Basic dimensions